Reliability Enhancement of Electric Vehicle Drives Using Fault-Tolerant Modular Cascaded Inverter Topology

Rajagopal.B
VIT Vellore, Tamilnadu, India
rajagopal.b2022@vitstudent.ac.in

Shanmuganathan.V
VIT Vellore, Tamilnadu, India
shanmuganathan.v2022@vitstudent.ac.in

Allwin Joshua.S
VIT Vellore, Tamilnadu, India
allwinjoshua.s2022@vitstudent.ac.in

***Abstract*—Electric cars need power converters that work well plus keep going even if something breaks. To help with this, engineers made a special kind of modular inverter - called MCI - that makes motor systems tougher when things go wrong. Instead of regular setups, each phase uses multiple small H-bridge units, which means you can swap parts easier while scaling up or handling failures better. When a problem pops up, built-in checks find the bad block quickly then cut it out from the circuit so the rest still run, just at reduced voltage. Because of that setup, everything keeps moving without sudden shutdowns.Besides, a feedback-based current regulator holds the motor's speed and twist steady, even if power dips. Tests run in MATLAB/Simulink reveal - boosting inverter levels from five to nine slashes harmonic mess sharply, cutting it from nearly 47% down to about 28%Ṡtill, when things go wrong, distortion jumps to 68% all because voltages get lopsided across phases. Yet, the engine keeps spinning at target pace - the working battery leg feeds extra juice through smart regulation. Bottom line? This toughened-up converter setup makes electric drives way more dependable, letting them roll on without major hiccups or slowdowns when parts fail.**

I. Introduction

Electric cars are changing how people move around the world because they use less energy and pollute less. Still, making them fast, safe, and dependable isn't easy. Out of all electric motors, ones with permanent magnets work best - they pack more punch and waste less power. But they only run well if the device feeding electricity works perfectly without hiccups. Regular two-stage inverters work fine when things are stable - yet they stop working once problems hit. So here's a new setup: a modular cascaded inverter built to handle breakdowns, keeping systems running even when something goes wrong inside.

A. Background and Motivation

The inverter's main job in electric car motors is turning battery power from direct current into adjustable alternating current. Since these vehicles face fast-changing loads and heat shifts, keeping the inverter dependable directly affects how safe and long-lasting the car will be. If one switching part fails or a circuit breaks open, it may lead to uneven current flow across phases, shaky driving force, or even complete system stoppage. That's why building inverters that keep working despite faults has turned into a key area of study for today's electric transport tech [1].

Still, setups like multilevel inverters - particularly CHB and MCI types - show better performance because they scale easier, cut down harmonic noise, and use separate building blocks [2]. Every H-bridge inside an MCI runs on its own DC supply, creating layered voltages close to a smooth sine wave. Since it's built in sections, if one part fails, the rest can keep working by skipping the broken piece, so the whole system doesn't crash.

With cars needing tougher safety rules like ISO 26262, handling faults isn't just nice to have - now it's essential. Because of better chips such as IGBTs or SiC MOSFETs, systems can switch faster, though heat-related glitches pop up more often. That means inverters must keep working when something goes wrong, yet stay small and cheap - which is now way more important [3]. Pushed by these issues, this study aims at building and testing a modular cascaded inverter that handles breakdowns well, boosting trustworthiness in electric car motors powered by PMSMs while keeping speed and strength intact.

B. Problem Statement

Even though control and power electronics have gotten much better, electric car drivetrains still struggle because inverters break down too easily. Older two- or three-step inverters work well when things run smoothly; however they can't handle failures on their own. If something goes wrong - a switch gets stuck closed, fails to close, or the signal unit dies - the whole inverter usually shuts off to avoid destroying parts, which kills propulsion right away. That sudden stop doesn't just make the system less dependable - it could also create danger while driving [4].

Still, setups such as Neutral Point Clamped or Flying Capacitor inverters tend to deliver smoother waveforms; however, their design gets tricky and isn't easy to tweak when faults happen. Because they use lots of capacitors and extra circuitry just to stay balanced, things get pricier, bulkier, and harder to manage. On top of that, many current fixes depend on backup parts added from outside - this piles on more clutter and heft, something EVs really don't need [5].

In PMSM setups, problems with inverters mess up the current flow, cause shaky torque, make windings too hot - over time hurting both lifespan and efficiency. When these

issues pop up, standard inverter-driven systems fail to keep delivering power smoothly. So the real hurdle is creating an inverter design able to spot bad parts on its own, shut them off safely, run on working sections instead, while still keeping voltage and output force steady enough. A suggested fix - the Modular Cascaded Inverter - tackles this by letting damaged units get skipped automatically and uses feedback regulation to stay balanced even if one block fails. With this method, it keeps things running reliably plus cuts idle periods, fitting well within what today's electric vehicles need for safe, uninterrupted function [6].

C. Contributions of the Work

This study introduces a modular cascaded inverter setup built for electric vehicles using permanent magnet motors. It works by spotting broken parts on the fly, cutting them out, then keeping things running with the good sections. Instead of crashing when something fails - like older models do - it keeps going at lower power. That way, even if issues pop up, the car stays safe and usable.

A closed-loop Hysteresis Current Control setup keeps motor current steady whether things run normal or something fails - helping cut down on jerky motion while keeping rotation consistent. Instead of relying on theory, real test runs in MATLAB/Simulink check how well inverters work across 5, 7, and 9-level setups by looking at output voltage shapes, distortion levels, along with how fast motors react when conditions shift suddenly. On top of that, a broken part scenario gets tested to show how one unit disconnects itself, what happens to voltage under stress, plus shifts in unwanted frequencies. To confirm it's not just software talk, basic circuit checks done through Tinkercad prove the breakdown alert and rerouting idea actually functions in practice.

This study delivers a sturdy, expandable, invertible setup that boosts EV motor reliability without losing function when things go wrong [7], yet holds steady during tough situations.

II. Literature Review

A. Overview of Multilevel Inverter Topologies

Multilevel inverters are getting more notice lately in motor setups because they deliver cleaner signals, cut down on unwanted noise, while managing higher voltages better than basic two-level types. The older designs - like NPC and FC models - helped split voltage more smoothly plus lowered strain on electronic parts. Still, those versions usually came with tricky balance needs, too many extra pieces, along with weak options when dealing with breakdowns.

Meanwhile, the Cascaded H-Bridge (CHB) inverter setup showed up as a flexible option - each H-bridge runs on its own DC supply. Because of this layout, voltages build in steps, output waves get cleaner, plus managing control gets easier [2], [3]. Especially, setups using CHB can create several voltage stages while cutting down harmonic noise, so they work well in heavy-duty or mid-level voltage uses like power grids linked to solar panels or battery-driven cars [9].

Latest updates in modular multilevel inverters brought extra backup features plus flexible setups, so they keep working even when some parts fail. Because of this shift, these designs are now favored in systems needing steady performance along with less electrical noise [10].

B. Modular Cascaded Inverter (MCI) in EVs

The Modular Cascaded Inverter (MCI), built from the cascaded H-bridge setup, is turning into a strong choice for EV motor systems because it scales easily, uses modular parts, also handles faults well. This design links several H-bridge units - one power source each, separate - in a line per phase, which helps create clean multi-step voltage signals without needing super fast switching [2], [3]. Compared to older types like NPC or Flying Capacitor setups, the MCI doesn't rely on clamp diodes or balance caps, making hardware less complex yet still efficient [8], [9].

With electric cars needing small but tough power converters, the MCI setup stands out because it's built in blocks that are easy to fix or swap. If one H-bridge unit fails, it gets skipped or cut off while the rest keeps running - just with a bit less voltage [3], [6]. Thanks to this ability to keep going despite glitches, the system runs more smoothly and spends less time offline.

On top of that, research shows modular inverters let each battery work on its own, which helps spread power more smoothly through the car [11]. These setups make it easier to use different ways to manage current - like field-based or switching methods - to boost turning force while cutting down harmonic noise [12]. Because of this, the MCI is now a go-to design for future electric vehicles needing strong output and steady operation even when something goes wrong.

C. PMSM Control Methods (PI, FOC, HCC)

The Permanent Magnet Synchronous Motor (PMSM) is now widely used in electric vehicles because it delivers strong torque, runs efficiently, also allows accurate control [1]. Still, getting the best out of PMSM systems depends mostly on how well the inverter's control method works. In the last 20 years, various approaches have emerged - each aiming to improve how quickly torque reacts, manage current better, while boosting total efficiency.

One common method is the Proportional–Integral (PI) type, still seen as basic yet popular. Still, it keeps things stable at low speeds and holds accuracy when settled, though it tends to react slowly during shifts and struggles if settings change [13]. Instead of sticking with that, engineers brought in Field-Oriented Control (FOC), breaking apart torque and flux parts from stator current so each can be managed on its own - much like how older DC motors work. This way, power delivery becomes smoother while handling quick changes better, which explains why it's now favored in electric vehicle systems [14].

Still, Hysteresis Current Control (HCC) stands out because it reacts quickly, handles changes in system specs without fuss, also doesn't need complex setup [5]. It keeps current inside a set range, so any deviation gets fixed on the spot. Even if the

switching rate jumps around, its instant reaction works great for setups like the MCI - modular inverters that depend on solid, snappy control [15].

D. Fault Detection and Isolation Techniques

Inverter performance in EV motors hinges on how fast and precise fault spotting is - delays mess things up quick. Problems in power circuits usually show up as broken switches, melted links, or messed-up signal triggers, each throwing off balance and risking danger. Spotting issues early - not later - keeps chain reactions at bay while keeping the system running smooth [11]. Some ways to spot issues in systems show up in studies - like using physical sensors or smart math tools. Old-school tactics check electric signals, so when numbers drift from normal, it likely means something's wrong [16]. Still, outside interference or shifting settings might mess with results. Meanwhile, newer tech builds a virtual copy of the system, then watches for gaps between real data and predictions, which usually gives clearer, more trustworthy alerts [17].

For setups like the MCI inverter, flexible control that handles faults works really well. When a problem pops up in one H-bridge unit, it gets skipped automatically through switching circuits, whereas working parts keep running without interruption [3], [6]. Instead of shutting down, the system cuts out the broken piece yet still runs - just at lower voltage. Because of this, pairing fast fault detection with split-up hardware boosts how dependable electric vehicle drives can be [18].

E. Research Gap and Motivation

Even though there's been real movement forward in creating multi-tier inverter setups and controls that handle faults, some holes in the research still stand out. Many current modular inverters depend on backup parts or tricky error-detecting software - this drives up expense and makes units bulkier [17], [18]. On top of that, earlier work usually zooms in on spotting issues right, yet skips talking about how stable control stays afterward or how noise levels shift when a part gets taken offline.

In PMSM-powered EVs, keeping things running smoothly when inverters fail - while avoiding sudden torque changes - is still tough [3], [5]. Still, using quick, straightforward switching tricks inside modular inverter setups hasn't been fully tested to boost car durability. Because of these gaps, this study zeroes in on building a Fault-Resistant Modular Stacked Inverter (MCI) that keeps power flowing, cuts down distortion shifts, improves dependability, yet skips bulky extra parts [6], [11].

III. Proposed Methodology

A. Modular Cascaded Inverter Configuration

The new Modular Cascaded Inverter (MCI) setup aims to produce clean multilevel voltages while supporting module-level failure handling. Every phase uses a number of H-bridge units linked one after another, with each powered by its own separated DC supply. Because of this layout, voltage steps form across various distinct stages - lowering overall waveform noise and easing strain on power switches [2], [9]. Since the MCI works in blocks, expanding the system becomes easier; it can handle more voltage without pushing single components beyond their limits [8].

Figure 1 shows a 5-step inverter setup using two linked H-bridge units for each phase. When running normally, every unit adds to the output voltage, giving five separate values: +2Vdc, +Vdc, zero, –Vdc, and –2Vdc. The layout in Figure 2 is built with three H-bridges per phase instead, making it capable of producing seven different voltage stages while cutting down unwanted signal noise. In much the same way, the version seen in Figure 3 uses four connected H-modules per phase, shaping the waveform closer to a smooth sine wave.

Every H-bridge runs on bipolar PWM, sharing synced carrier waves. The phase voltage at output (Vph) comes from combining each bridge's voltage values. With more levels added, harmonics shrink while performance gets noticeably better [9], [11]. On top of that, the MCI setup supports separate module handling and targeted disconnection, making it possible to keep things running even if parts fail - useful for EV drive systems [3], [6].

B. Closed-Loop Hysteresis Current Control for PMSM

To keep torque accurate and reactions quick, the new PMSM setup uses a Closed-Loop Hysteresis Current Control (HCC) linked with a Modular Cascaded Inverter (MCI). Instead of waiting, the HCC method keeps each motor phase current close to its target by trapping it inside a set boundary. If the sensed current jumps above or drops below that zone, the system flips the inverter's state right away to correct it [5], [15]. Because adjustments happen straightaway without delays, performance stays sharp during changes - also making it tougher when things go wrong. Look at Figure 4 - here, the HCC loop's made up of three main parts: a current ref maker, an error checker, or the switch logic chunk. Ref currents (ia, ib, ic) come from the torque signal sent by the PMSM speed regulator instead. Real-time phase readings (ia, ib, ic) get grabbed nonstop then stacked against those refs somehow. Once the difference jumps past the hysteresis limit (±i), the checker flips the matching inverter arm's on/off mode, which keeps current under close control.

HCC skips the need for tricky modulation math, unlike standard sine-based PWM or vector methods, reacting fast when loads shift suddenly [14]. Also, thanks to straightforward circuit logic, it fits well with plug-and-play inverters, letting every H-bridge unit run on its own. That means steady motor behavior, less jerky motion, and even speed handling - even if part of the inverter fails [15], [18].

C. Fault-Tolerant Logic Design

The MCI's ability to keep working during failures comes from a built-in FDI system that keeps the motor running if an H-bridge or switch dies. Shown in Figure 5, this resilience setup runs through four steps: sensing voltage and current, using a comparator, processing signals via a logic block, then activating the isolation part.

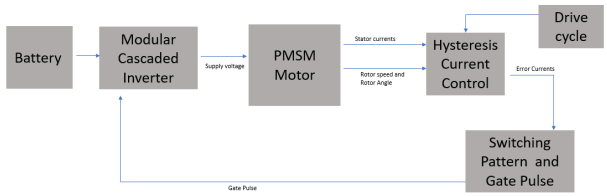

Fig. 1: Block Diagram Of the HCC Control of PMSM Motor

The detection starts by watching the inverter's voltage and current as things happen. When something shifts too much - like a spike in current, no current at all, or uneven DC levels - it's seen as a possible fault [16]. A comparator checks these readings and raises a warning signal. That alert goes into a control section built with logic gates like AND, OR, plus latches that hold state. Based on this setup, it figures out which part - or switch - is faulty, then fires off a shutdown message to the disconnect system [17].

The isolation setup cuts off the broken H-bridge - using either a solid-state switch or fuse - while working parts keep running. That way, the inverter shifts from 5 levels down to just 3, still powering things on but at lower voltage [3], [11]. Even if harmonics go up a bit, it avoids killing the whole motor system. Using live monitoring along with adaptable circuits, this new error-resistant design boosts inverter durability, keeps electric vehicles running safely, while also extending equipment life when issues occur [18].

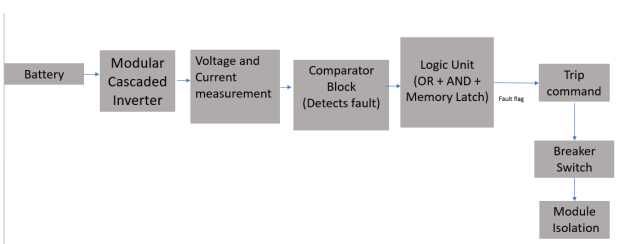

Fig. 2: Block Diagram of Fault Tolerant Logic in MCI

D. Mathematical Modeling of Inverter Output

The math setup for a Modular Cascaded Inverter (MCI) shows how several H-bridge units combine to form the output phase voltage using separate DC supplies. For an m-level inverter, every phase arm includes $(m-1)/2$ H-bridges linked end-to-end - each capable of delivering one of three levels: $+V_{dc}$, 0, and $-V_{dc}$. So, the total phase voltage at any moment equals the combined outputs from all active blocks [8], [9]:

$$V_{\text{ph}}(t) = \sum_{k=1}^{n} S_k(t) \cdot V_{dc} \tag{1}$$

where $S_k(t)$ is the switching function of the k-th H-bridge module, defined as:

$$S_k(t) = \begin{cases} +1, & \text{for } V_{ao} = +V_{dc} \\ 0, & \text{for } V_{ao} = 0 \\ -1, & \text{for } V_{ao} = -V_{dc} \end{cases} \tag{2}$$

The total line-to-line voltage of the inverter for any two phases (say, A and B) is then given by:

$$V_{LL}(t) = V_{\text{phA}}(t) - V_{\text{phB}}(t) \tag{3}$$

Under ideal balanced conditions, the root mean square (RMS) of the fundamental output voltage per phase is:

$$V_{\text{ph,RMS}} = \frac{m_a \cdot V_{dc}}{\sqrt{2}} \tag{4}$$

where m_a is the modulation index, representing the ratio of reference amplitude to carrier amplitude.

The Total Harmonic Distortion (THD), a key performance metric, is defined as [9]:

$$\text{THD} = \sqrt{\frac{\sum_{n=2}^{\infty} V_n^2}{V_1^2}} \times 100\% \tag{5}$$

These equations collectively describe the inverter's output behavior under normal operation. When a faulted module is isolated, n decreases, leading to lower output voltage levels and increased THD, a phenomenon later analyzed in the simulation results [3], [6].

E. Battery and DC Source Design

Every H-bridge unit in the Modular Cascaded Inverter (MCI) needs its own separate DC power source to produce distinct voltage steps. Instead of shared supplies, this setup uses individual $LiFePO_4$ batteries with isolation between them since they pack more energy, last through many charge cycles, hold up well under heat - key traits when powering electric vehicles [11].

One H-bridge pair powers each phase in the 5-level setup - two individual 12-volt batteries feed them. Because of this split supply, every phase can hit a max of 24 volts when running steady. In like manner, the 7-level version runs on three battery units; the 9-level one uses four. Voltage from each block gets scaled down so overall output stays equal, but wave steps get finer. Breaking up the voltage across blocks makes it easier to expand later or reroute around failures.

If one H-bridge fails, its battery gets cut off using the safety setup from Section 5.3 - so others keep delivering energy, which means lower voltage yet steady function. Tests show that, during sudden changes, $LiFePO_4$ units handle current better than standard lithium-ion cells do [19]. So the new battery setup gives backup through modules, keeps power use even, while working well with strong MCI-driven motors in electric cars [12], [19].

IV. Simulation Setup and Analysis

A. MATLAB/Simulink Model Description

The full simulation setup for the suggested fault-tolerant modular cascaded inverter linked to a permanent magnet synchronous motor was built in MATLAB/Simulink - this allowed testing how it works when running normally or during faults. As seen in Figure 3, the system layout features three main parts: the MCI power section, connected to the hysteresis current control unit, then tied into the PMSM drive model.

Every stage of the inverter uses a pair of linked H-bridge units to make five voltage levels. One feeds into the next, both running on separate DC supplies, managed by switching signals from comparator-driven control circuits. This setup watches real-time voltage and current data - thanks to the fail-safe system shown in Fig 4 and 5 - to spot problems in switches or entire blocks. If it catches a sudden surge or no flow at all, it cuts off the broken unit and shifts smoothly to three-level mode instead, keeping the motor going without interruption.

The HCC unit, seen in Fig. 4, keeps current inside a preset range by quickly changing how the inverter switches. Instead of using fixed timing, it reacts right away when needed. The PMSM setup follows common dq math rules, tuned to match a 5 kW, 48-volt Brogen engine [11]. To catch fast switching behavior clearly, each sim step ran at 1 microsecond - this helps get solid readings during sudden shifts and noise checks [14], [15]

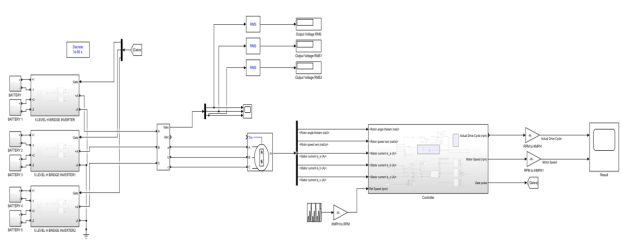

Fig. 3: Simulink Model of the Fault Tolerant MCI based PMSM Motor Control

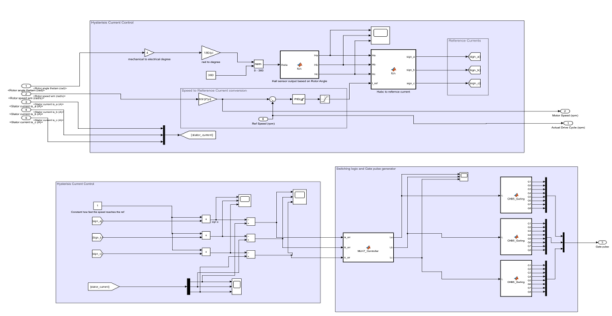

Fig. 4: Simulink Model of the Hysteresis Current Control

B. Case 1: 5-Level MCI without Fault

When things work right, the 5-step MCI sends a stair-like voltage to the PMSM - each phase uses two linked H-bridge units to build that signal. Check Figure 11 - the setup makes five clear voltage steps (+2Vdc, +Vdc, zero, –Vdc, –2Vdc), so the output looks almost like a smooth wave with fewer distortions than regular 2-step inverters. Since it's built in blocks, each H-bridge shares load evenly; at the same time, HCC keeps phase current steady by sticking close to its set range [5], [15].

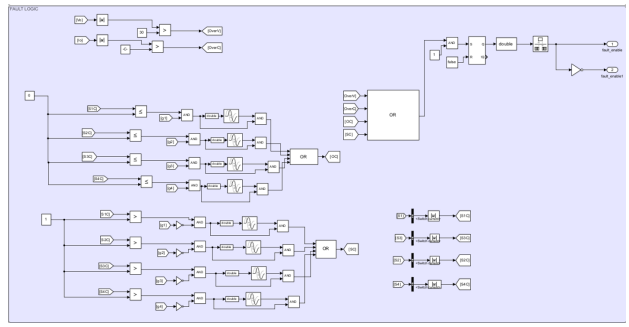

Fig. 5: Logic Circuit of Fault Detection in Inverter

The present level of precision allows steady magnetic force generation - this shows right away in how fast the motor spins. As seen in Figure 11's driving pattern, the motor sticks close to the target speed, whether speeding up quick or slowing down sudden. That means the control setup keeps delivering strong real-time reactions when things run normally.

In harmonic behavior, the output voltage shows noticeable distortion - around 46.9% THD - a figure that lines up with earlier results from similar 5-level cascade inverters [9]. While this value's on the high side when stacked against more complex setups, it still works fine for medium-voltage EV motor drives, especially since ease of switching and modularity matter most there.

On the whole, this 5-step setup runs steady, handles current well, while keeping speed on track - this becomes a reference point when looking at more complex setups or failure situations later on.

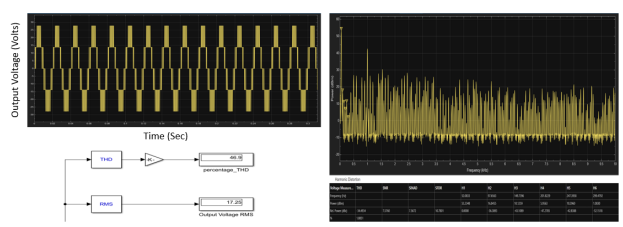

Fig. 6: 5 Level Output Voltage and Spectral Analysis

C. Case 2: 9-Level MCI without Fault

The second scenario checks how well the 9-step modular cascade inverter works when running normally. Here, every phase uses four linked H-bridge units, which together create nine separate voltage steps. The resulting wave pattern and motor speed reaction show up in Figure 7. Just like predicted, having more steps makes the signal look much closer to a

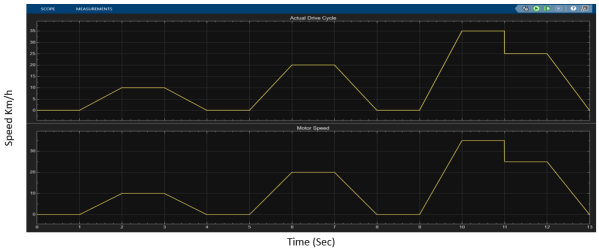

Fig. 7: Actual Drive Cycle Vs PMSM Motor Speed

smooth sine curve, boosting output clarity over the simpler 5-step setup.

Using four voltage changes every half cycle means the inverter handles shifts more gently, so level switches are less abrupt. That leads to much cleaner output, cutting THD down to 27.9% - a clear step up from the 5-level version's 46.9%Ṗast work shows the same trend: stacking more levels in CHB inverters tends to clean up harmonics while easing strain on motor coils [8], [9].

The PMSM handles the drive cycle well - speed sticks close to the target without noticeable lag. Thanks to cleaner currents from the 9-level inverter, torque fluctuations drop, so pickup feels more even while running at constant load. In this setup, where voltage steps are finer, the hysteresis controller works smarter: it triggers less often yet keeps current firmly on track across the entire test period [5], [15].

This example shows better harmony plus movement control when using advanced MCI setups - setting a useful reference point prior to adding systems that handle errors.

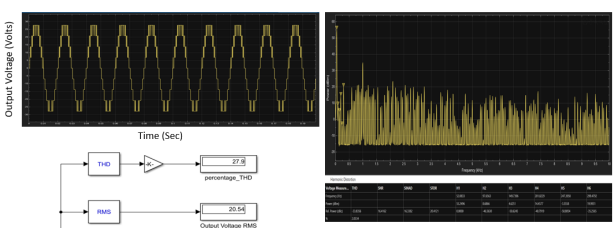

Fig. 8: 9 Level Output Voltage and Spectral Analysis

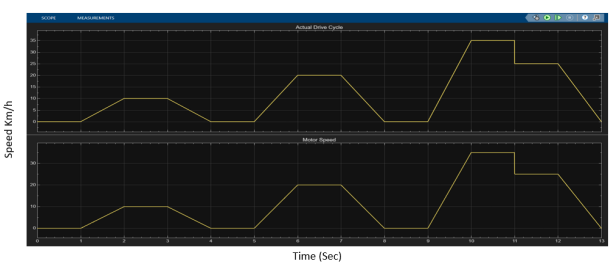

Fig. 9: Actual Drive Cycle Vs PMSM Motor Speed

D. Case 3: 5-Level MCI With Fault Tolerance

In this test, the 5-part stacked inverter got checked under an artificial failure to show how well the new error-handling method works. As seen in Figure 13, a malfunction was triggered at t = 0.7 s inside one H-bridge section. Right when the system spotted it, the cutoff action shut off the broken part, so the device shifted without delay from producing five voltage steps down to just three. That shift shows clearly in the power wave - instead of its usual multi-step shape, it now forms only three levels: +Vdc, zero, and –Vdc.

After being isolated, THD jumped from 46.9% - normal five-step operation - to nearly 68% matching usual drops in performance when fewer levels are active in such systems [3], [11]. Even with worse waveform quality, the motor kept consistent RPM because the hysteresis-based current regulator reacted quickly, tweaking the target current inside its tolerance range to make up for lower voltage capacity [5], [15].

The test shows speed stays almost normal right after the glitch, which means the setup avoids a full stop. Even though the leftover battery pack delivers more power once the issue hits, the inverter still runs without problems - proof that the backup design works well under stress.

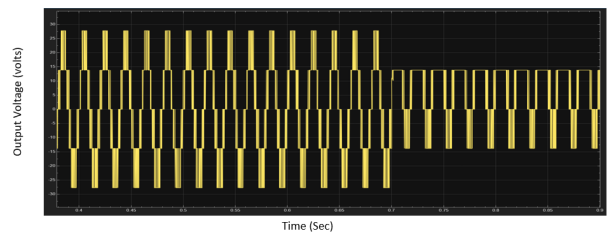

Fig. 10: Output Voltage during Fault condition

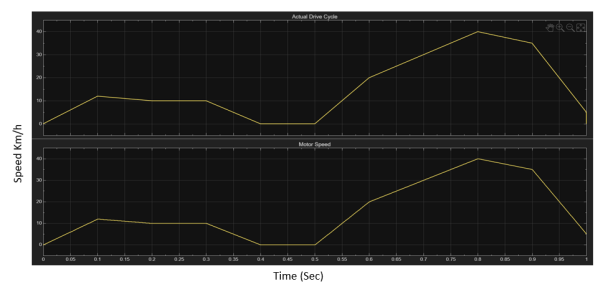

Fig. 11: Actual Drive Cycle Vs PMSM Motor Speed during Fault condition

E. THD, Speed, and Current Comparison

A side-by-side look at how the inverter works in every test scenario reveals how voltage steps and faults affect harmonics, steady motor speed, or current flow. Higher voltage levels lead to better THD numbers - dropping from 46.9% for 5 stages, then falling further to 33.96% with 7, until hitting just 27.9% using 9 levels; this trend matches earlier findings on multi-tier inverters seen in past studies [8], [9].

Speed tracking got better when voltage steps were finer. Even though every setup handled the driving pattern well, the 9-step version delivered the most even speed with almost no fluctuation. On the flip side, when things went wrong and the

system switched from 5 levels down to just 3, the working battery had to supply more current for a short time. That extra current helped the motor keep producing enough force to hold speed, showing the control method still worked - even with less power on hand.

Even so, when you look closer, the test shows that despite extra harmonics and higher currents from fault handling, the new MCI setup keeps the motor running steady while still holding up well when things go sideways.

F. Discussion of Results

The test outcomes show how well the new Modular Cascaded Inverter (MCI) keeps working, whether things are normal or something goes wrong. At t = 0.7 s, once a fault popped up, the setup quickly cut off the broken H-bridge in Phase A. Because of that change, the inverter shifted from using five voltage steps down to just three, which made the max output drop while harmonics went up. That kind of shift makes sense - fewer steps mean it's harder to shape a smooth sine-like wave [3], [11].

Even though the voltage dropped, the motor kept spinning at the same rate because the built-in speed regulator adjusted on its own by asking for more twisting force. Because twist power in this motor type depends straight on coil flow, the system pulled extra current from the working battery pack left in action. You could clearly see this jump when speeding up - where resistance to motion mattered most - and while cruising steadily, since drag stayed steady throughout.

Still, pushing more current means dealing with extra electrical strain. When running close to the motor's top speed (around 3000 rpm), the needed current can jump from 115 A to almost 200 A, which boosts heat in wires and raises chances of overload harm. So even though the setup keeps working during issues, going fast isn't safe anymore because both motor and battery face greater heat and power pressure.

Still, findings show the suggested error-resistant setup keeps running well - though real-world use ought to cap top speed when problems pop up so things stay safe and last longer.

V. Conclusion

A. Summary of Findings

This research introduced a rugged power setup built for permanent magnet motors in electric cars - a modular inverter type that keeps running even when parts fail. Instead of shutting down, broken sections get cut out on their own while the rest keep working fine. Using Simulink models, engineers tested setups with 5, 7, or 9 voltage steps to see how clean the output gets with more layers. As step count went up, noise dropped sharply - from nearly half to under third - showing clearer waveforms come from denser switching patterns.

When something went wrong, the setup cut off the broken part by 0.7 seconds - making the 5-step inverter run like a 3-step version instead. Even though distortion rose and voltage dipped slightly, the motor's speed stayed steady thanks to active hysteresis feedback control. A basic test with an Arduino plus relays showed the method actually works in real time using cheap, common parts. Every trial backed up one clear idea - the MCI handles faults well, scales easily, and holds up under stress for electric vehicle drives.

B. Practical Implications

The results point to real-use benefits when building dependable EV drivetrains. One, keeping things running even if an H-bridge fails helps avoid unexpected shutdowns - this keeps drivers safer on actual roads. Two, thanks to a split-up battery layout, power gets managed more freely while repairs become easier since single units can be swapped out without messing up the rest. Three, using hysteresis-based current regulation worked well at making up for lost voltage once faults were cut off, so the motor still gives steady pulling force.

Still, the findings point to some key real-world issues. When things go wrong, the leftover battery part and switches have to handle more current. Say you're trying to keep up fast speeds - it might pull close to 200 A, way above the normal 115 A when everything's working right, which can lead to parts getting too hot or wearing out faster. So, cars using this setup should cap their top speed if a fault pops up, just to stay safe and avoid damaging electronics over time.

C. Future Scopes

Folks could take this study farther by trying a few cool next steps. Swapping out relays for solid-state bypass tech or speedy gate-driver isolation might ditch lag, helping it handle snappy, high-power EV setups. On top of that, tossing in smart glitch-spotting tricks - like prediction models, ML sorting, or live tracking systems - may sharpen error calls while cutting down on false alarms.

A working model built with SiC parts could test harmonics, heat patterns, besides current fluctuations during both normal plus faulty conditions. In the end, linking the MCI to smarter PMSM methods - like forecast-driven torque handling or self-adjusting band limits - might boost responsiveness while cutting down on switch-related waste. Such upgrades would move this setup nearer to real-world electric vehicle use, at the same time improving trustworthiness, effectiveness, and durability.

References

[1] K. T. Chau, *Electric Vehicle Machines and Drives: Design, Analysis and Application*, Wiley-IEEE Press, 2015.

[2] L. M. Tolbert, F. Z. Peng, and T. G. Habetler, "Multilevel converters for large electric drives," *IEEE Transactions on Industry Applications*, vol. 35, no. 1, pp. 36–44, 1999.

[3] F. Wu, J. Zhang, and Z. Chen, "Fault-tolerant operation of cascaded H-bridge multilevel inverters for electric vehicles," *IEEE Transactions on Power Electronics*, vol. 33, no. 4, pp. 3792–3802, 2018.

[4] D. Das, R. Sharma, and A. Bhowmik, "A new cascaded multilevel inverter for modular structure," *MDPI Electronics*, vol. 13, no. 17, p. 3566, 2024.

[5] C. Ogbuka, "A high-performance hysteresis current control of PMSM drive," *Turkish Journal of Electrical Engineering & Computer Sciences*, vol. 25, no. 1, pp. 74–85, 2017.

[6] M. Ali, A. Raza, and F. Khan, "Open switch fault diagnosis of cascaded H-bridge multilevel inverter," *ScienceDirect – Electrical Power and Energy Systems*, vol. 235, pp. 142–150, 2021.

[7] M. D. Z. R. Khan, N. Ahmed, and S. Mikkili, "Design and hardware implementation of modular multilevel inverter for PMSM drives," *International Journal of Current Research in Engineering & Technology*, vol. 3, no. 4, pp. 45–54, 2023.

[8] J. Rodríguez, S. Bernet, B. Wu, J. O. Pontt, and S. Kouro, "Multilevel voltage-source-converter topologies for industrial medium-voltage drives," *IEEE Transactions on Industrial Electronics*, vol. 54, no. 6, pp. 2930–2945, Dec. 2007.

[9] S. Kouro, M. Malinowski, K. Gopakumar, J. Pou, et al., "Recent advances and industrial applications of multilevel converters," *IEEE Transactions on Industrial Electronics*, vol. 57, no. 8, pp. 2553–2580, Aug. 2010.

[10] A. Lesnicar and R. Marquardt, "An innovative modular multilevel converter topology suitable for a wide power range," *IEEE Bologna PowerTech Conference Proceedings*, pp. 1–6, 2003.

[11] F. Wu, J. Zhang, and Z. Chen, "Fault-tolerant operation of cascaded H-bridge multilevel inverters for electric vehicles," *IEEE Transactions on Power Electronics*, vol. 33, no. 4, pp. 3792–3802, Apr. 2018.

[12] M. Ali, A. Raza, and F. Khan, "Open switch fault diagnosis of cascaded H-bridge multilevel inverter," *Electric Power Systems Research*, vol. 235, pp. 142–150, 2021.

[13] M. Depenbrock, "Direct self-control (DSC) of inverter-fed induction machine," *IEEE Transactions on Power Electronics*, vol. 3, no. 4, pp. 420–429, 1988.

[14] J. Holtz, "Pulsewidth modulation for electronic power conversion," *Proceedings of the IEEE*, vol. 82, no. 8, pp. 1194–1214, 1994.

[15] C. Ogbuka, "A high-performance hysteresis current control of permanent magnet synchronous motor drive," *Turkish Journal of Electrical Engineering & Computer Sciences*, vol. 25, no. 1, pp. 74–85, 2017.

[16] M. Haji-Esmaeili, M. Naseri, H. Khoun-Jahan, and M. Abapour, "Fault-tolerant structure for cascaded H-bridge multilevel inverter and reliability evaluation," *IET Power Electronics*, vol. 10, no. 1, pp. 59–70, 2017.

[17] A. Karthikeyan and S. Mikkili, "Review on model-based fault diagnosis techniques in power electronic converters," *IEEE Access*, vol. 8, pp. 197404–197428, 2020.

[18] S. Chen, H. Zhang, and Y. Deng, "Reconfigurable fault-tolerant control for modular multilevel converters under submodule faults," *IEEE Transactions on Power Delivery*, vol. 35, no. 3, pp. 1354–1364, 2020.

[19] D. M. Sousa, J. L. Afonso, and M. F. Silva, "Performance comparison of LiFePO and Li-ion batteries for electric vehicle applications," *IEEE Transactions on Transportation Electrification*, vol. 6, no. 3, pp. 1090–1098, 2020.